MILLA HANDLES
13-15 Avenue du Bois
94430 Chennevières-sur-Marne
France
Tel. +33 1 75 36 64 32 · contact@millapoignees.com
www.millapoignees.com

TECHNICAL DATA SHEET

Durable and easy-to-maintain zamak door handle PRIMULA

Technical drawing

Dimensions in millimetres

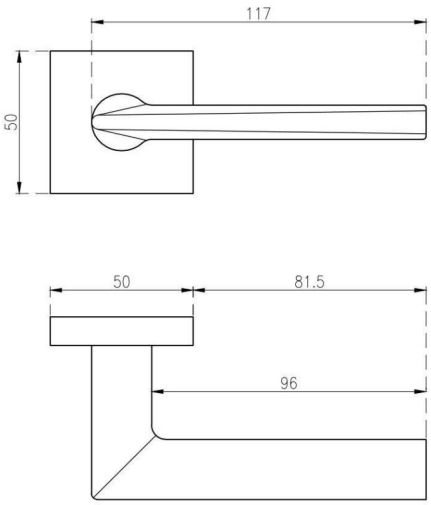



Specifications

Material	Zamak
Surface coating	Electrophoresis
Backplate | rose thickness	7mm (fine)
Rose shape	Square
Return spring	Yes
Fixings	Wood screws and/or through fixing screws
Mounting accessories	Screws, Adaptors, Square spindle
Use	Interior
Standards and Compatibility	Suitable for French, Belgian and Swiss standards
Unit of sale	Per pair
Warranty	2 years

Available finishes

- Anthracite (gunmetal)
- Chrome
- Matt chrome
- Gold
- Matt gold
- Matt nickel
- Black

	ITEM	DATE	PAGE
	Durable and easy-to-maintain zamak door handle PRIMULA	27/10/2026	1 / 2
		SCALE Not to scale	FORMAT A4

Non-contractual document. Indicative dimensions in millimetres, subject to manufacturing tolerances.
MILLA HANDLES · www.millapoignees.com · contact@millapoignees.com

Technical details

- A pair of handles — left and right — combined with a 7 mm thick plate
- 2 mounting adapters
- 1 spindle of 8 mm and 7 mm diameter
- 2 M4 through bolts (to secure the adapters to the door)
- 2 screws and a 3 mm Allen key (to secure the handles to the adapters)
- Set of wood screws (on special request)
- Mounting instructions in French
- Construction material: zamak (solid handle, guaranteeing quality and durability)
- The product is new and the manufacturer offers a 24-month guarantee
- All our design handles are fitted with a self-smoothing double metal spring (ensuring great stability)

Non-contractual document. Indicative dimensions in millimetres, subject to manufacturing tolerances.
MILLA HANDLES · www.millapoignees.com · contact@millapoignees.com